NOTES :

FOR BERM WIDTH DIMENSIONS, SEE GENERAL DRAWING.

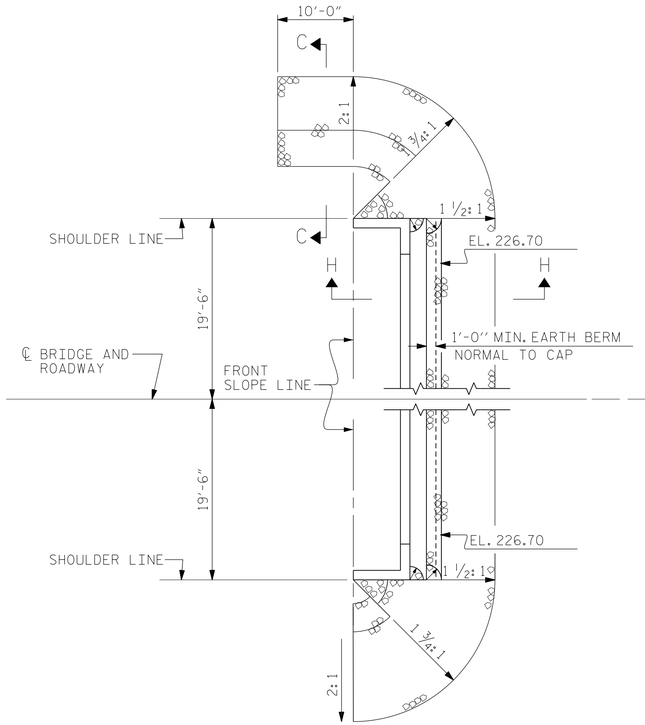

SHOULDER RIP RAP IS HIGHER THAN BERM RIP RAP

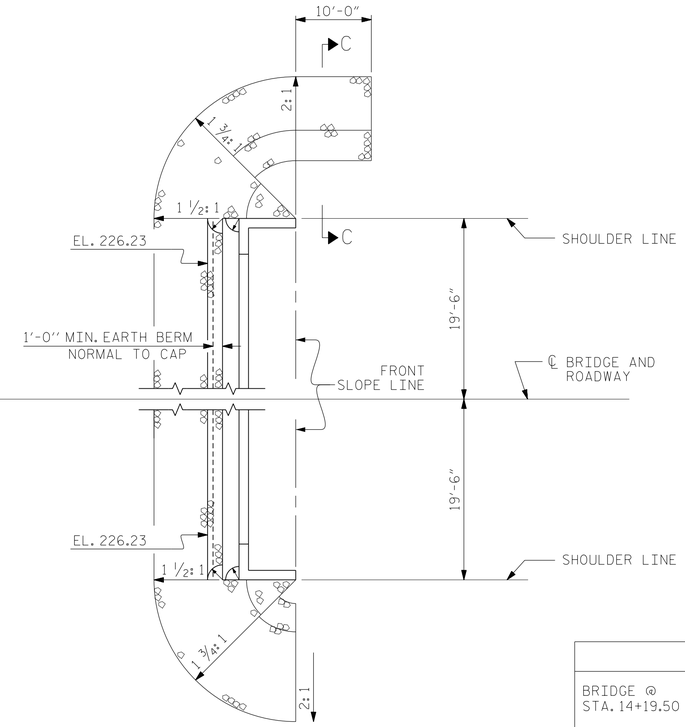

BERM RIP RAPPED

ESTIMATED QUANTITIES		
BRIDGE @ STA. 14+19.50 -L-	RIP RAP CLASS II (2'-0" THICK)	GEOTEXTILE FOR DRAINAGE
	TONS	SQUARE YARDS
END BENT 1	95	105
END BENT 2	85	95

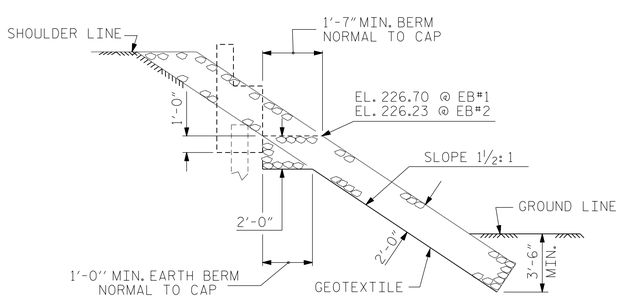

SECTION H-H

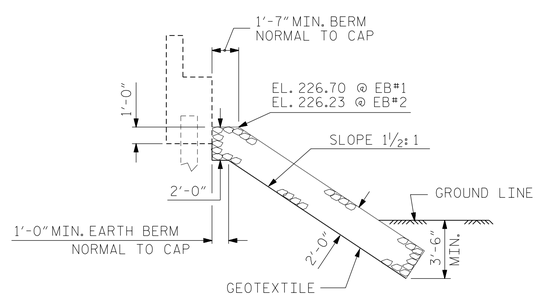

℄ SECTION

BERM RIP RAPPED

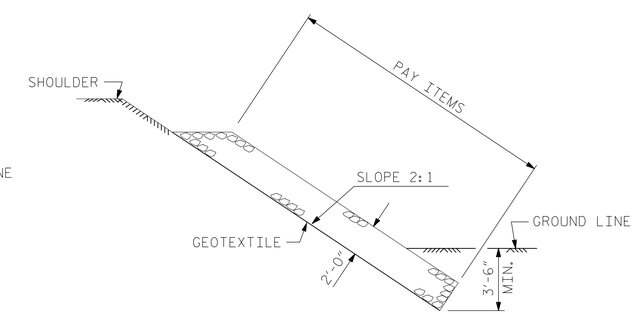

SECTION C-C

PROJECT NO. 17BP.5.R.78

WARREN COUNTY

STATION: 14+19.50 -L-

NORTH CAROLINA PROFESSIONAL SEAL 11725 ENGINEER DAVID R. RUGGIES

DocuSigned by: David R. Ruggies C462768DF412422 10/24/2022

DOCUMENT NOT CONSIDERED FINAL UNLESS ALL SIGNATURES COMPLETED

STEWART

Firm License No. C-1051
421 Fayetteville St,
Suite 400
Raleigh, NC 27601
T 919.380.8750
www.stewartinc.com

STATE OF NORTH CAROLINA
DEPARTMENT OF TRANSPORTATION
RALEIGH

STANDARD

RIP RAP DETAILS

REVISIONS						SHEET NO.
NO.	BY:	DATE:	NO.	BY:	DATE:	S-14
1			3			TOTAL SHEETS
2			4			16

DRAWN BY:	E. PHELPS	DATE :	12/17
CHECKED BY:	J. LOFTUS	DATE :	01/18
DESIGN ENGINEER OF RECORD:	J. LOFTUS	DATE :	01/18

WARREN 140

2/13/2019
...\400_014_920140_SMU_RR01.dgn
USER:vchung

STD. NO. RR1 (Sht 2)