PROJECT REFERENCE NO.	SHEET NO.
17BP.5.R.78	2A-1

ROADWAY DESIGN ENGINEER
NORTH CAROLINA PROFESSIONAL SEAL 045230 ENGINEER MICHAEL S. BURNS, JR.
DocuSigned by: Michael S. Burns, Jr. 1/24/2019

PAVEMENT DESIGN ENGINEER
NORTH CAROLINA PROFESSIONAL SEAL 22896 ENGINEER CLARK MORRISON
DocuSigned by: Clark Morrison 1/25/2019

STEWART
Firm License No. C-1051
223 S. West St.
Suite 1100
Raleigh, NC 27603
T 919.380.8750
www.stewartinc.com

DOCUMENT NOT CONSIDERED FINAL UNLESS ALL SIGNATURES COMPLETED

PAVEMENT SCHEDULE

(FINAL PAVEMENT DESIGN)

C1	PROP. APPROX. 3″ ASPHALT CONCRETE SURFACE COURSE, TYPE S9.5B, AT AN AVERAGE RATE OF 165 LBS. PER SQ. YD. IN EACH OF TWO LAYERS.
C2	PROP. VAR. DEPTH ASPHALT CONCRETE SURFACE COURSE, TYPE S9.5B, AT AN AVERAGE RATE OF 110 LBS. PER SQ. YD. PER 1″ DEPTH. TO BE PLACED IN LAYERS NOT TO EXCEED 1½″ IN DEPTH.
D1	PROP. APPROX. 4″ ASPHALT CONCRETE INTERMEDIATE COURSE, TYPE I19.0C, AT AN AVERAGE RATE OF 456 LBS. PER SQ. YD.
D2	PROP. VAR. DEPTH ASPHALT CONCRETE INTERMEDIATE COURSE, TYPE I19.0C, AT AN AVERAGE RATE OF 114 LBS. PER SQ. YD. PER 1″ DEPTH, TO BE PLACED IN LAYERS NOT LESS THAN 2½″ IN DEPTH OR GREATER THAN 4″ IN DEPTH.
E1	PROP. APPROX. 4″ ASPHALT CONCRETE BASE COURSE, TYPE B25.0C, AT AN AVERAGE RATE OF 456 LBS. PER SQ. YD.
R1	SHOULDER BERM GUTTER.
T	EARTH MATERIAL.
W	WEDGING (SEE THIS SHEET FOR WEDGING DETAIL).

NOTE: PAVEMENT EDGE SLOPES ARE 1:1, UNLESS SHOWN OTHERWISE

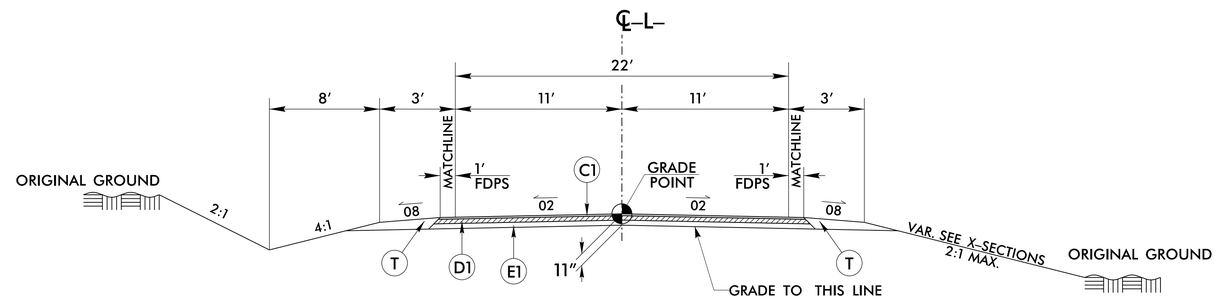

TYPICAL SECTION NO. 1

–L– STA. 10+50.00 TO –L– STA. 13+68.38 (BEGIN BRIDGE)
–L– STA. 14+70.63 (END BRIDGE) TO –L– STA. 18+00.00

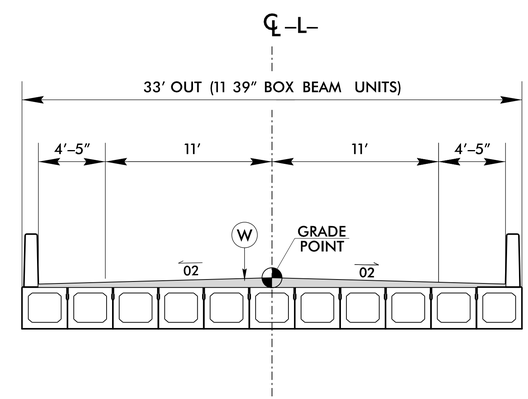

NOTE:
FOR ASPHALT DEPTHS, SEE STRUCTURE PLANS

TYPICAL SECTION NO. 2

–L– STA. 13+68.38 (BEGIN BRIDGE) TO –L– STA. 14+70.63 (END BRIDGE)

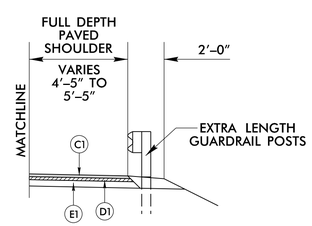

DETAIL SHOWING PAVING TO THE FACE OF GUARDRAIL ON –L–

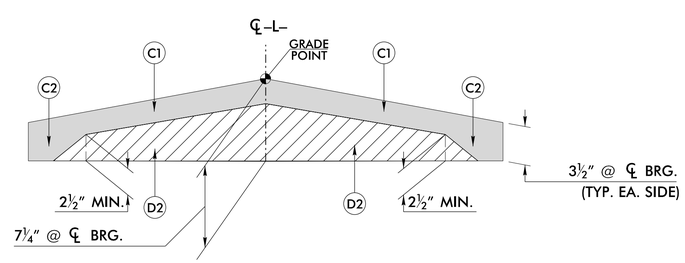

DETAIL SHOWING METHOD OF WEDGING ON BRIDGE

USE IN CONJUNCTION WITH BRIDGE TYPICAL SECTION

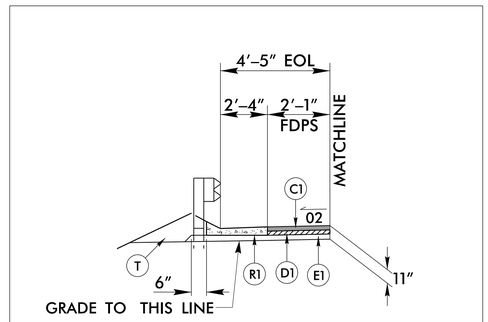

DETAIL SHOWING GUARDRAIL WITH SHOULDER BERM GUTTER

USE SHOULDER BERM GUTTER AT THE FOLLOWING LOCATIONS:
–L– STA. 14+81.50 (END APPROACH SLAB) TO –L– STA. 14+98.00 (LEFT)
–L– STA. 14+81.50 (END APPROACH SLAB) TO –L– STA. 14+98.00 (RIGHT)

REVISIONS

5/14/99

1/24/2019
17BP.5.R.78_20140_RDY_TYP.dgn
USER: Burns