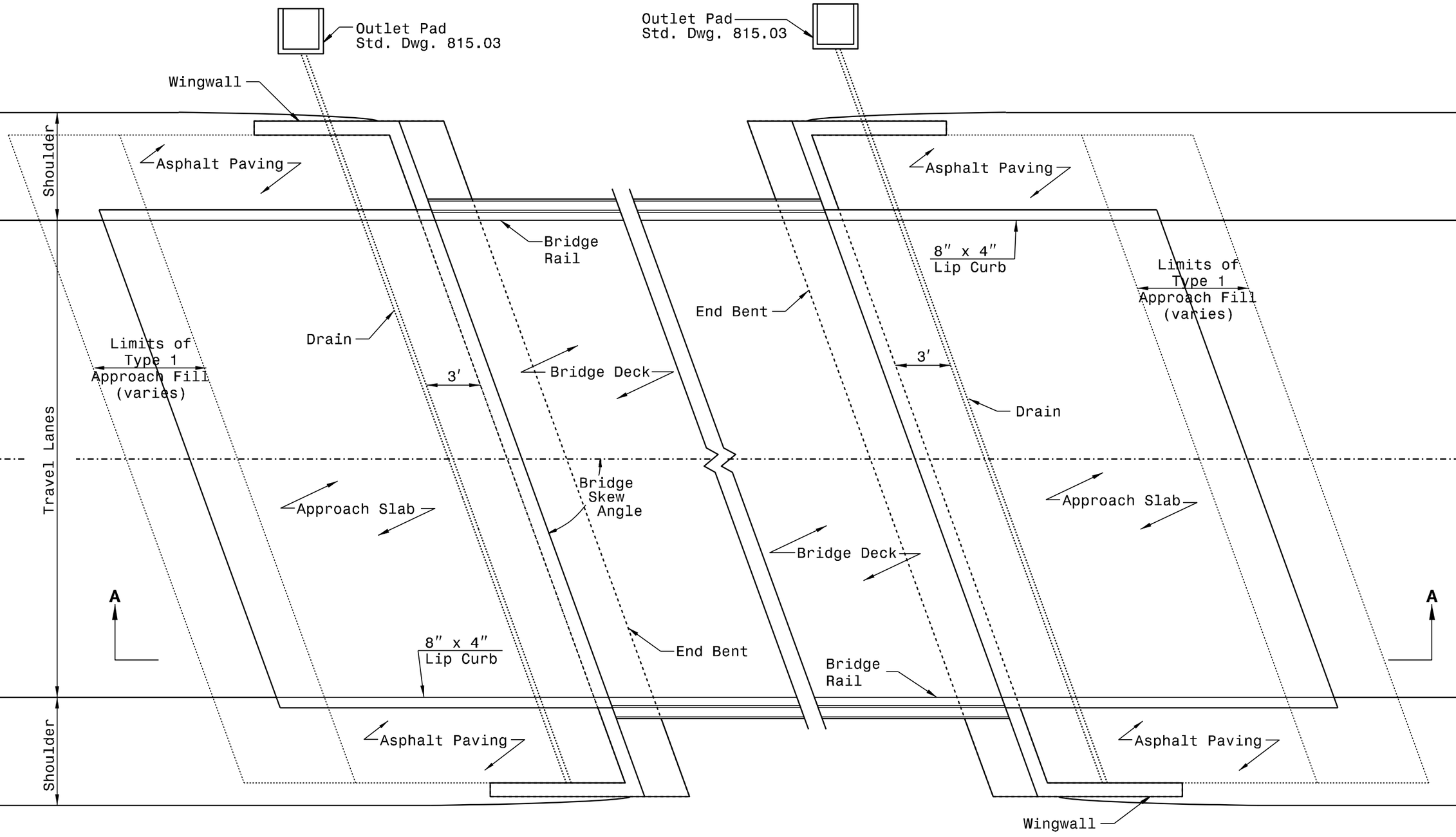

PLAN VIEW
APPROACH SLAB

STATE OF
NORTH CAROLINA
DEPT. OF TRANSPORTATION
DIVISION OF HIGHWAYS
RALEIGH, N.C.

1-24

ROADWAY STANDARD DRAWING FOR
BRIDGE APPROACH FILLS
TYPE 1 APPROACH FILL

SHEET 1 OF 2

423.01

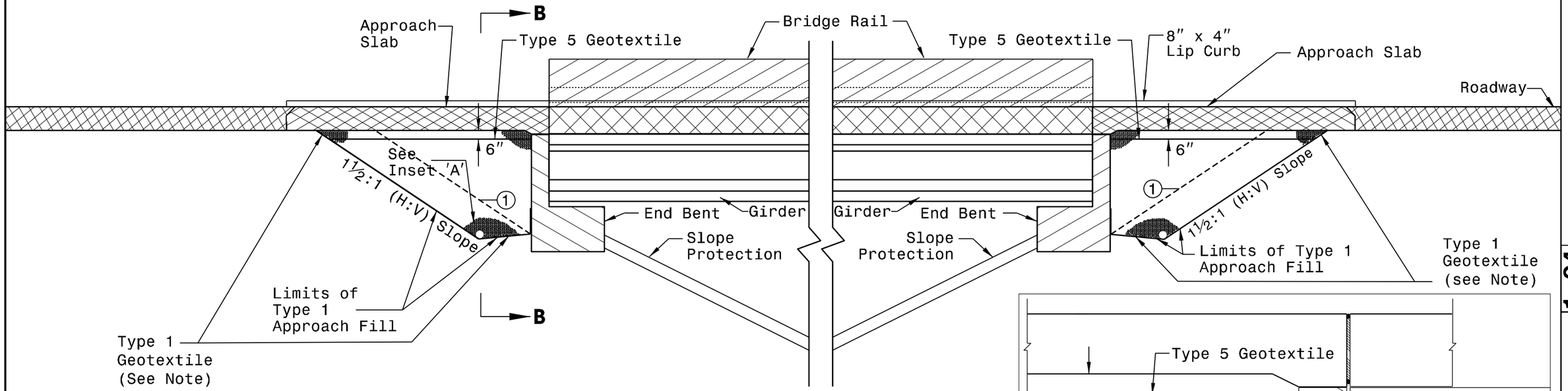

SECTION A-A
(Girder bridge shown, Cored Slabs and Box Beams similar)

① 1½:1 Compacted Temporary Fill Slope (Not necessary for cuts)

Note: If 1½:1 slope intersects subgrade beyond the end of the approach slab, wrap type 1 geotextile back over the approach fill to 18" under approach slab as shown on sheet 2 of 2 on Std. Dwg. 423.02.

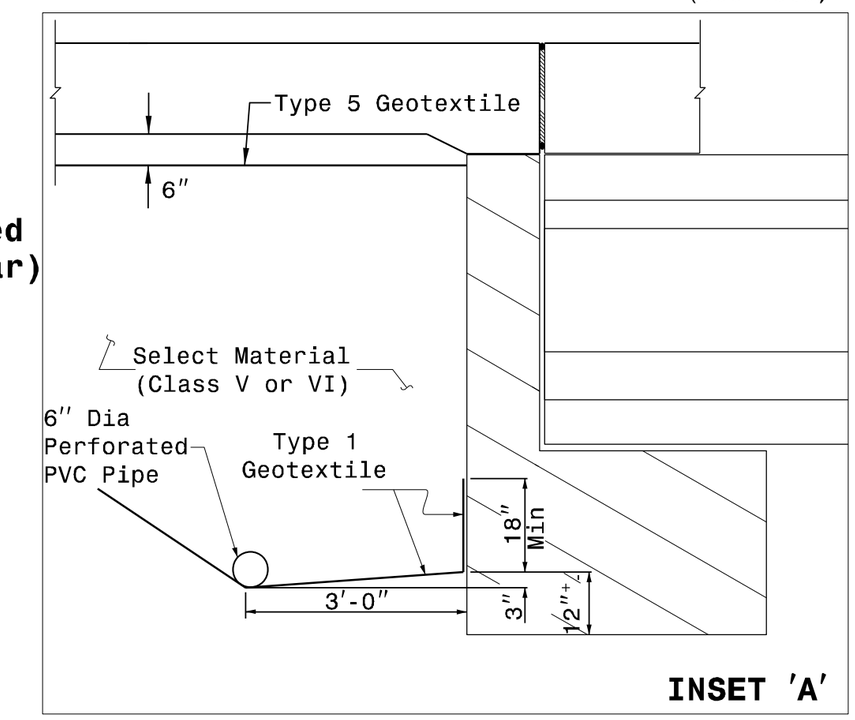

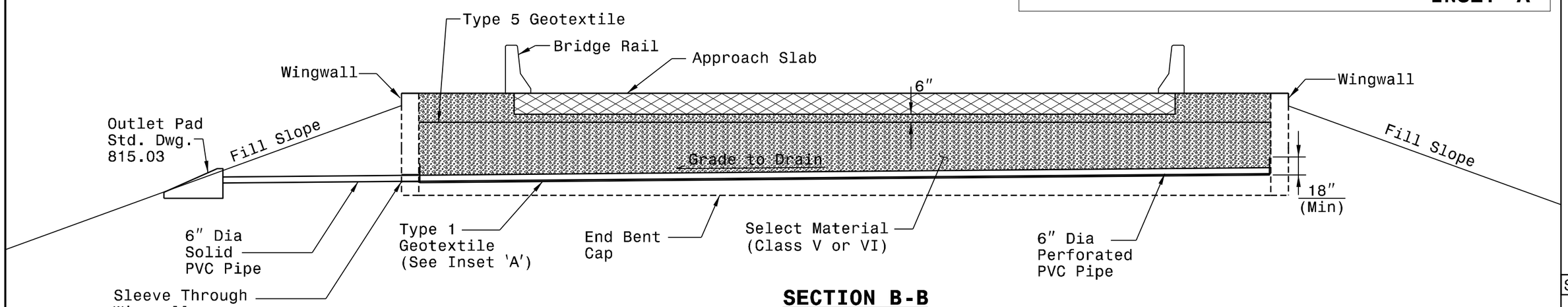

SECTION B-B

STATE OF NORTH CAROLINA
DEPT. OF TRANSPORTATION
DIVISION OF HIGHWAYS
RALEIGH, N.C.

1-24

ROADWAY STANDARD DRAWING FOR
BRIDGE APPROACH FILLS
TYPE 1 APPROACH FILL

SHEET 2 OF 2

423.01

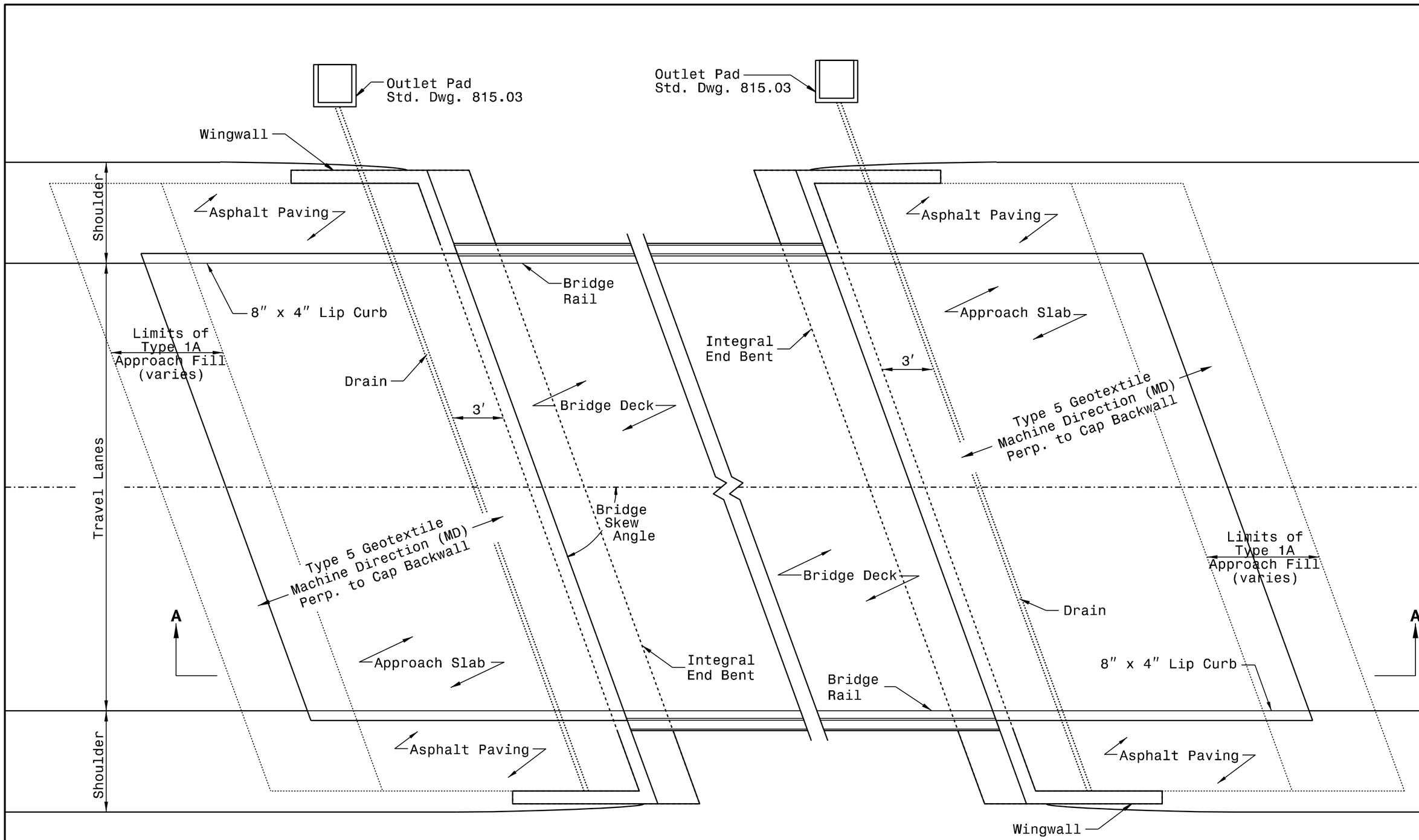

PLAN VIEW
APPROACH SLAB

1-24

STATE OF
NORTH CAROLINA
DEPT. OF TRANSPORTATION
DIVISION OF HIGHWAYS
RALEIGH, N.C.

ROADWAY STANDARD DRAWING FOR

BRIDGE APPROACH FILLS

TYPE 1A APPROACH FILL
ALTERNATE FOR INTEGRAL ABUTMENT

SHEET 1 OF 3

423.02

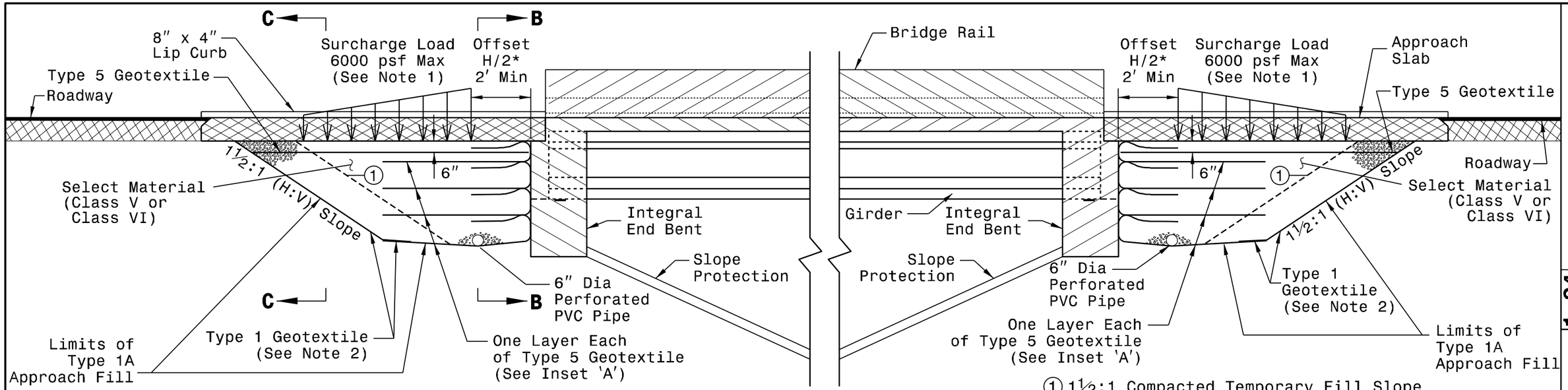

NOTE 1: Temporary geotextile walls are designed for a maximum eccentric surcharge pressure of 6000 psf for the offest shown. Surcharge loads from construction equipment, e.g., cranes that exceed 6000 psf are the Contractor's responsibility.

SECTION A-A

(*H As Shown on Sheet 3 of 3)

Note 2: If 1½:1 slope intersects subgrade beyond the end of the approach slab, wrap type 1 geotextile back over the approach fill to 18″ under approach slab as shown on sheet 2 of 3 on Std. Dwg. 423.04.

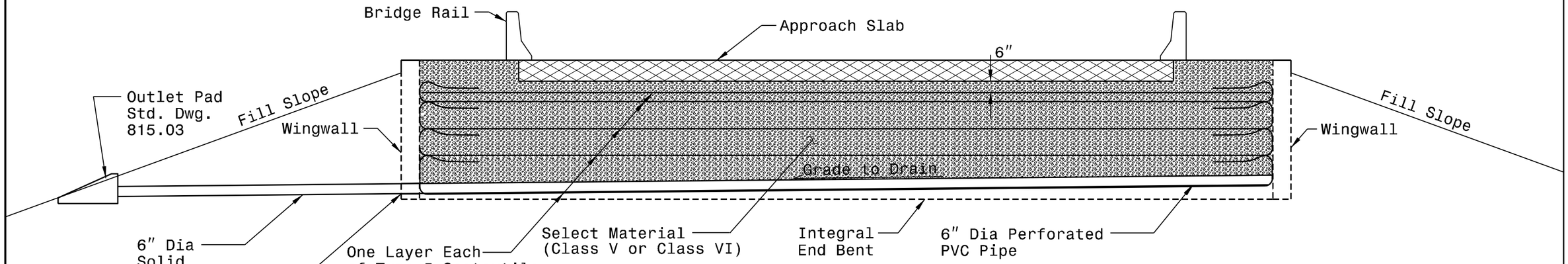

SECTION B-B

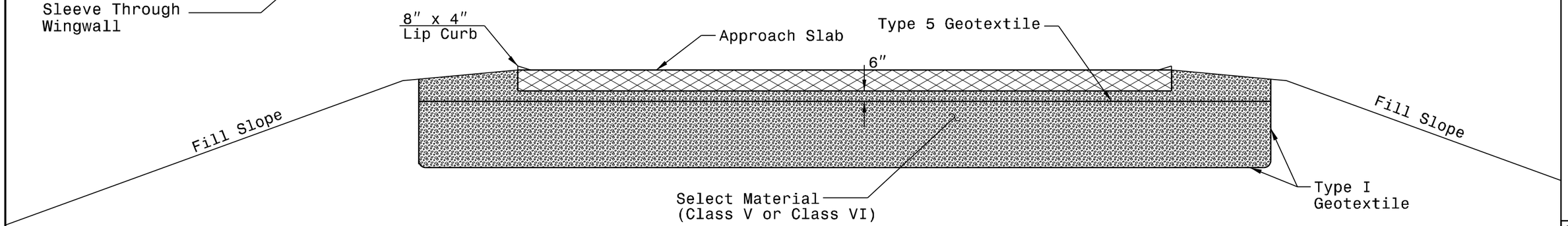

SECTION C-C

STATE OF
NORTH CAROLINA
DEPT. OF TRANSPORTATION
DIVISION OF HIGHWAYS
RALEIGH, N.C.

1-24

ROADWAY STANDARD DRAWING FOR

BRIDGE APPROACH FILLS

TYPE 1A APPROACH FILL
ALTERNATE FOR INTEGRAL ABUTMENT

SHEET 2 OF 3

423.02

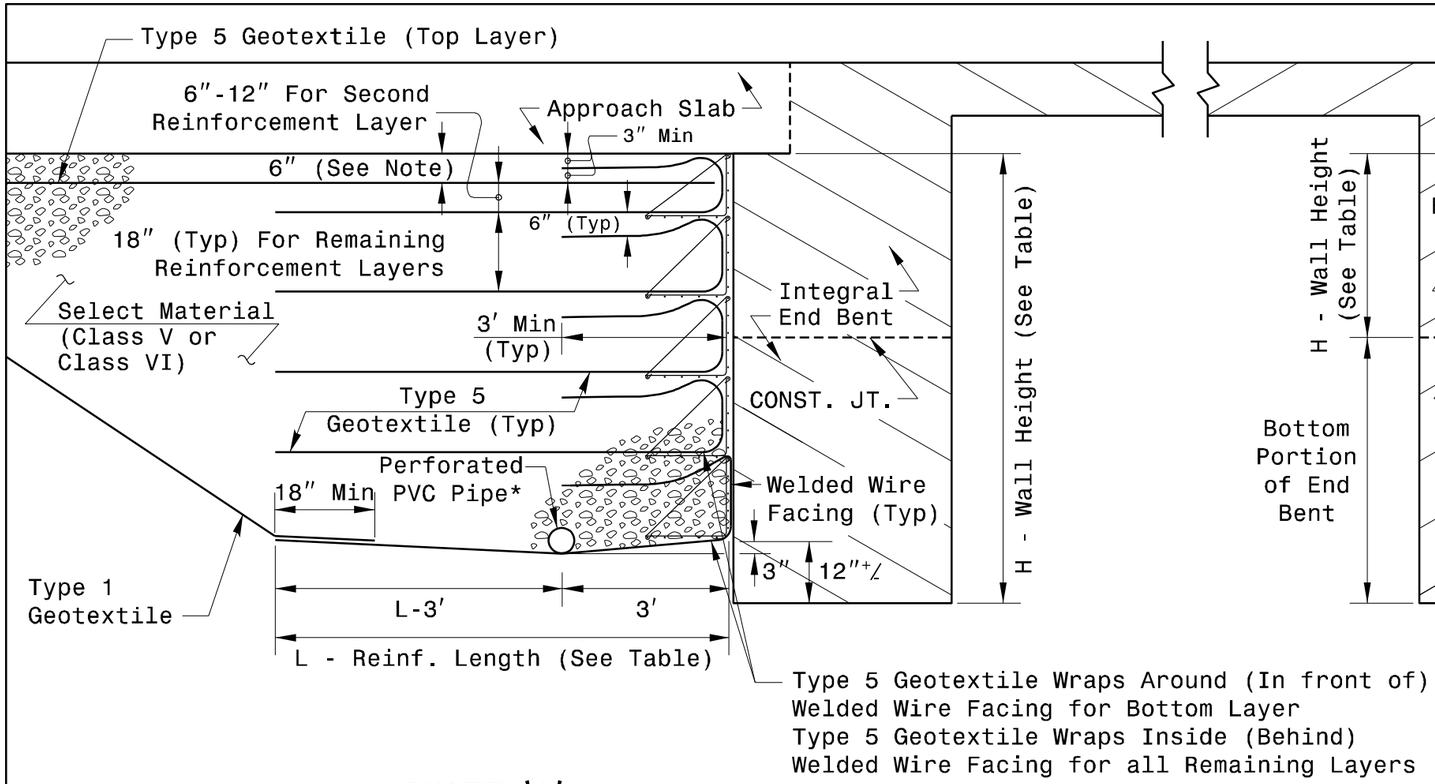

INSET 'A'

NOTE: Place top (first) reinforcement layer 6″ below top of wall regardless of vertical spacing for underlying reinforcement layers. As shown in insets above, it is not necessesary to wrap the top layer of geotextile reinforcement at the wall face.

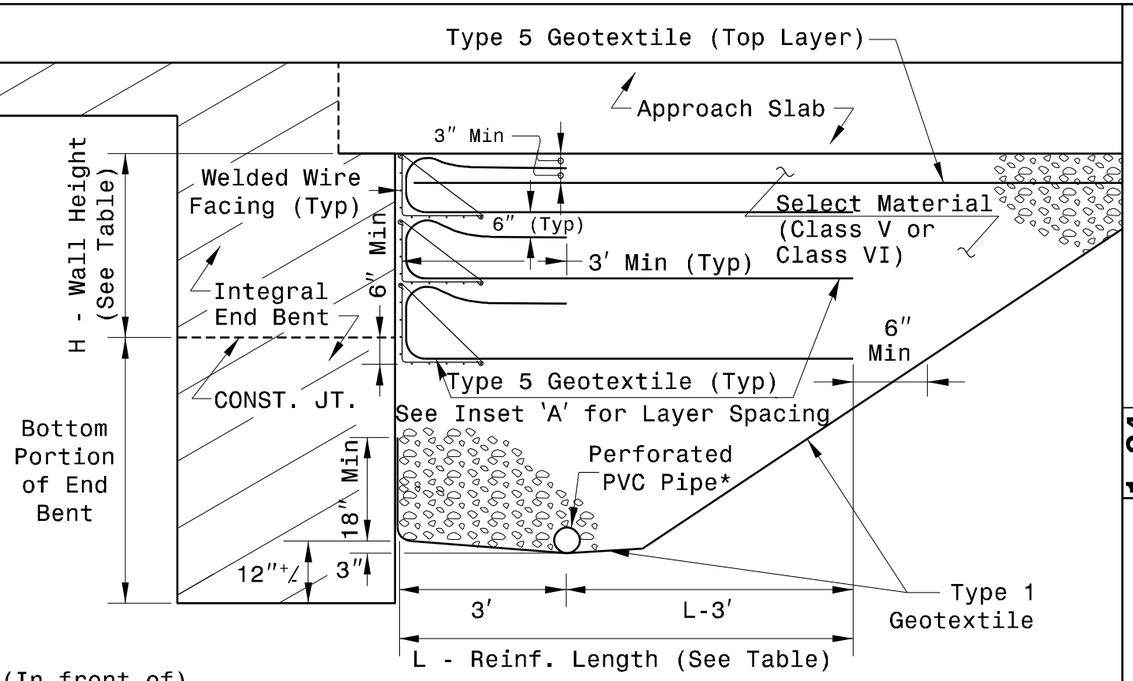

ALTERNATE INSET 'A'

(Allowed When Bottom Portion of Integral End Bent is Constructed Before Temporary Wall and End Bent Piles are at Least 25′ Long or Drilled In)

TEMPORARY GEOTEXTILE WALL DETAILS

(*Perforations Pointing Down and Pipes Sloped to Drain)

TYPE 5 GEOTEXTILE REINFORCEMENT LENGTH (except for top layer)	
WALL HEIGHT H (ft)	REINFORCEMENT LENGTH L (ft)
< 8	8
8 TO 12	= H

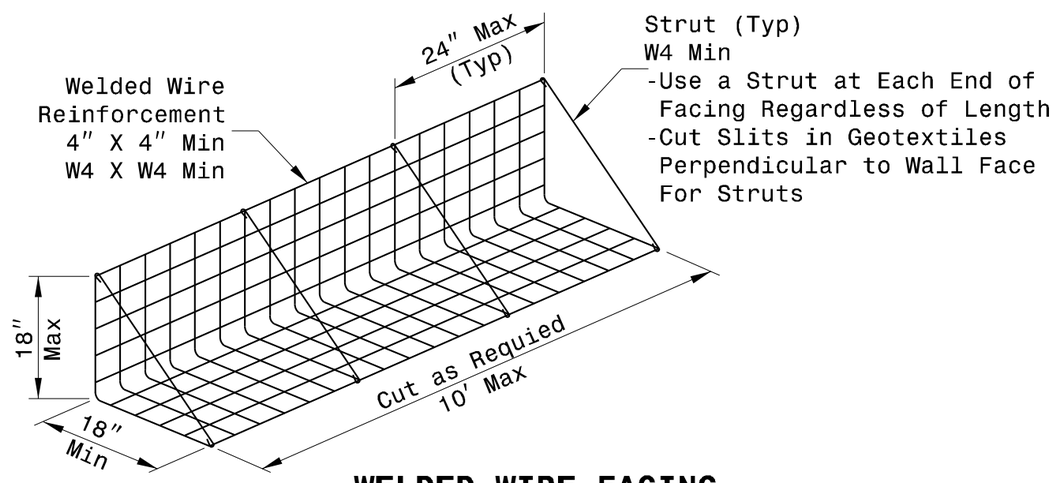

WELDED WIRE FACING

STATE OF NORTH CAROLINA
DEPT. OF TRANSPORTATION
DIVISION OF HIGHWAYS
RALEIGH, N.C.

1-24

ROADWAY STANDARD DRAWING FOR
BRIDGE APPROACH FILLS
TYPE 1A APPROACH FILL
ALTERNATE FOR INTEGRAL ABUTMENT

SHEET 3 OF 3

423.02

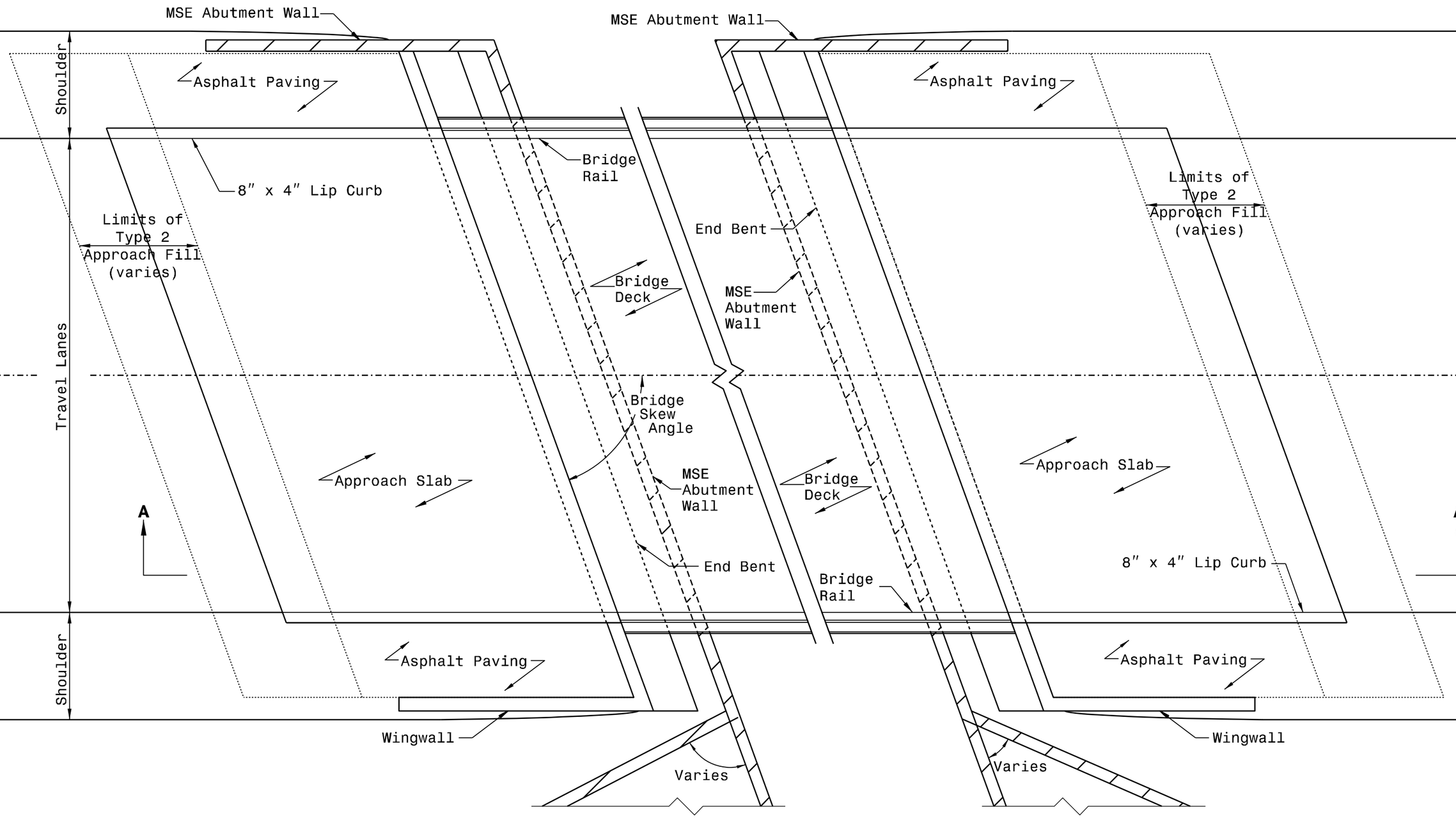

PLAN VIEW
APPROACH SLAB

1-24

STATE OF
NORTH CAROLINA
DEPT. OF TRANSPORTATION
DIVISION OF HIGHWAYS
RALEIGH, N.C.

ROADWAY DETAIL DRAWING FOR
BRIDGE APPROACH FILLS
TYPE 2 APPROACH FILL
FOR MSE WALLS

SHEET 1 OF 2

423.03

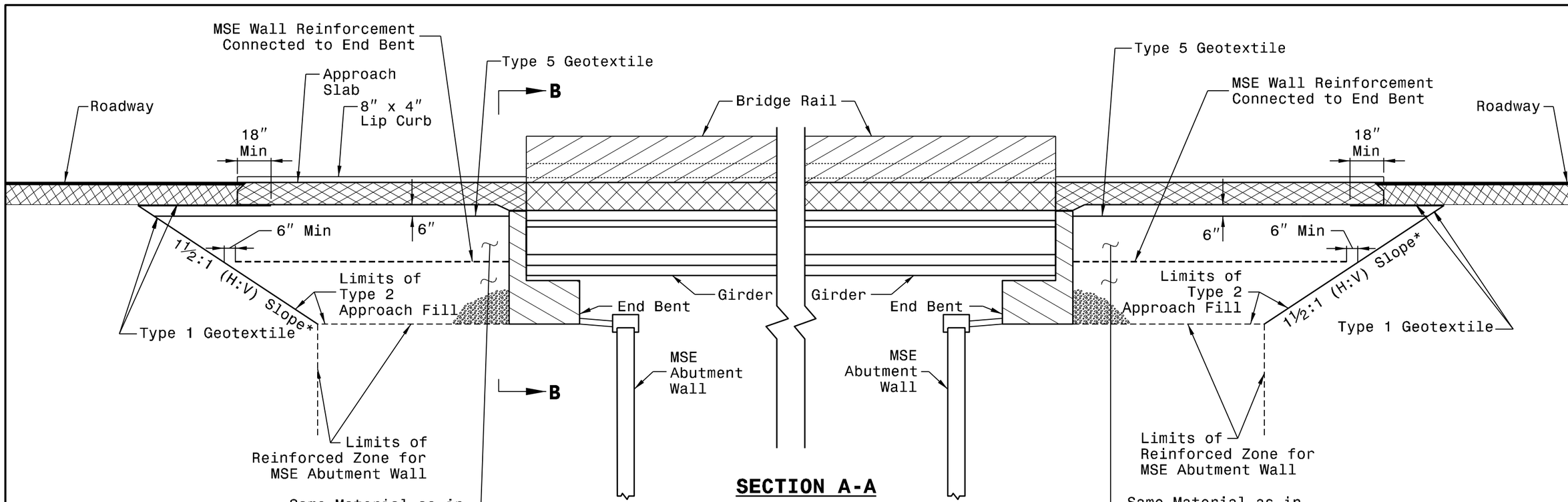

SECTION A-A

(*1½:1 Slope Beigns at Back of Reinforced Zone for MSE Abutment Wall as Shown)

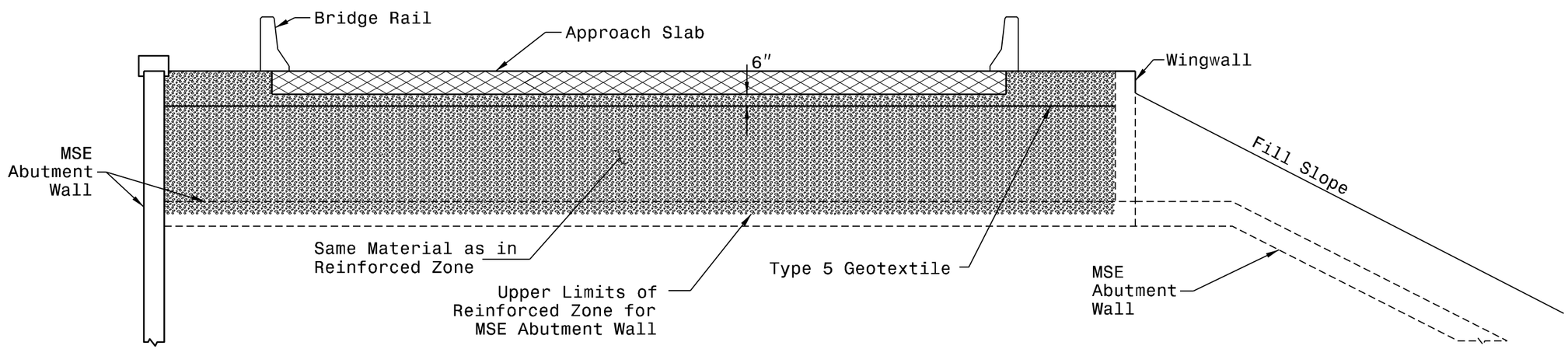

SECTION B-B

(MSE Wall Reinforcement Not Shown for Clarity)

STATE OF NORTH CAROLINA
DEPT. OF TRANSPORTATION
DIVISION OF HIGHWAYS
RALEIGH, N.C.

1-24

ROADWAY DETAIL DRAWING FOR

BRIDGE APPROACH FILLS

TYPE 2 APPROACH FILL FOR MSE WALLS

SHEET 2 OF 2

423.03

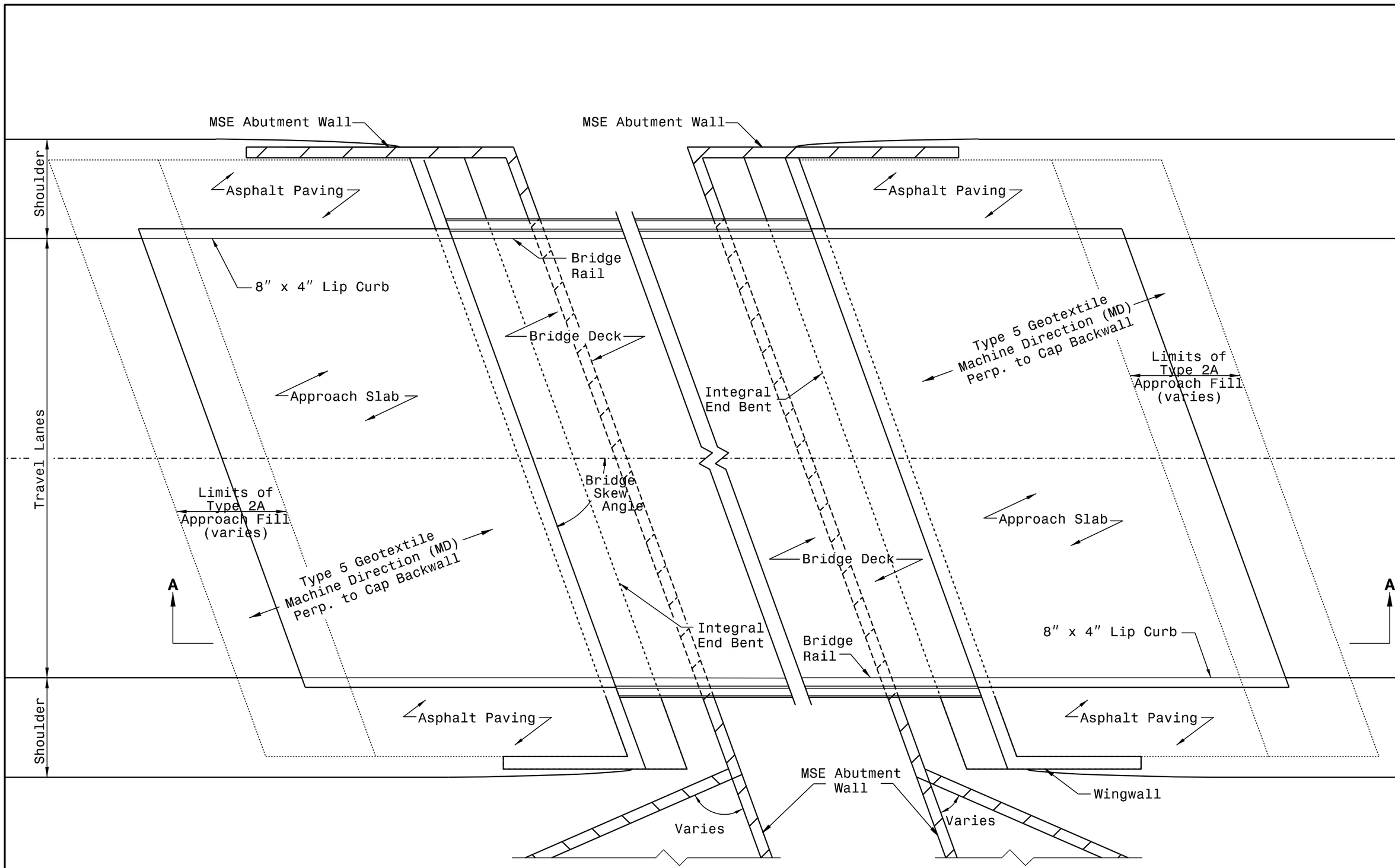

PLAN VIEW
APPROACH SLAB

STATE OF
NORTH CAROLINA
DEPT. OF TRANSPORTATION
DIVISION OF HIGHWAYS
RALEIGH, N.C.

1-24

ROADWAY DETAIL DRAWING FOR

BRIDGE APPROACH FILLS

TYPE 2A APPROACH FILL
ALTERNATE FOR INTEGRAL ABUTMENT

SHEET 1 OF 3

423.04

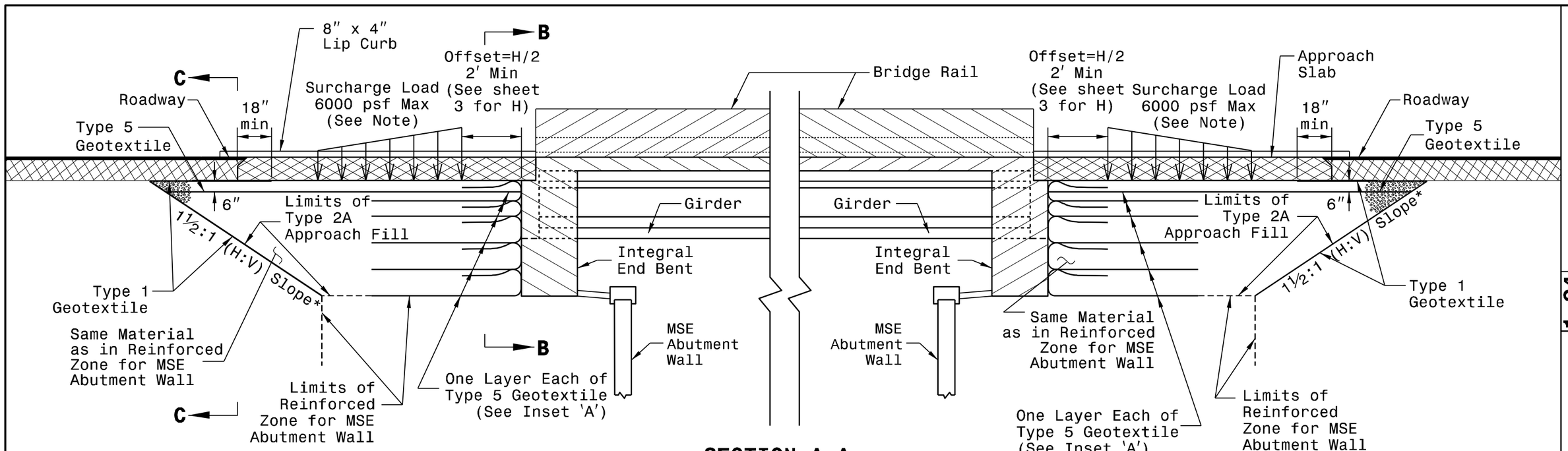

NOTE: Temporary geotextile walls are designed for a maximum eccentric surcharge pressure of 6000 psf for the offest shown. Surcharge loads from construction equipment, e.g., cranes that exceed 6000 psf are the Contractor's responsibility.

SECTION A-A

(*1½:1 Slope Begins at Back of Reinforced Zone for MSE Abutment Wall as Shown)

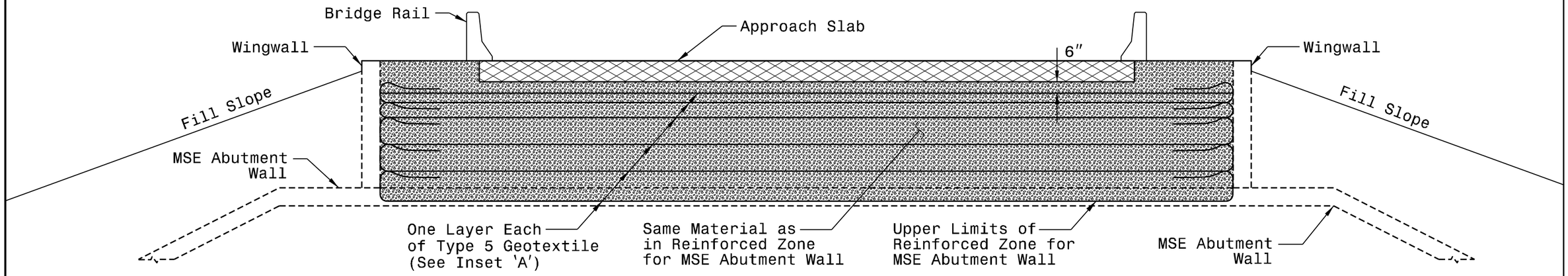

SECTION B-B

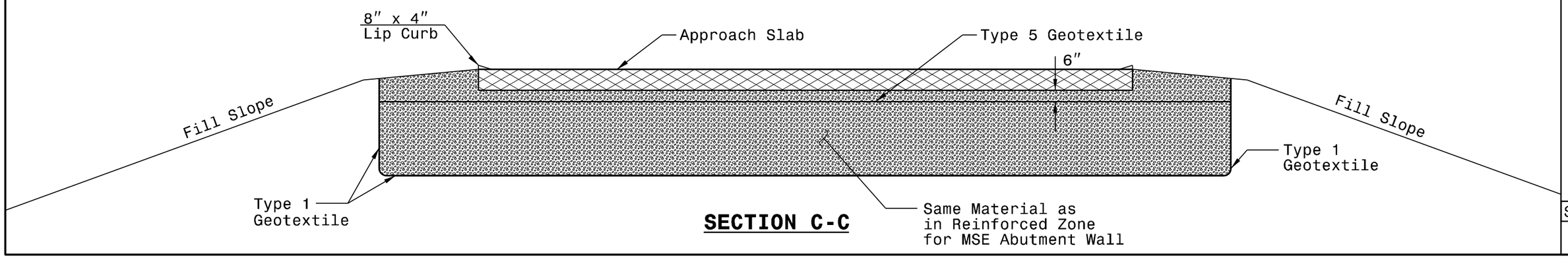

SECTION C-C

STATE OF
NORTH CAROLINA
DEPT. OF TRANSPORTATION
DIVISION OF HIGHWAYS
RALEIGH, N.C.

1-24

ROADWAY DETAIL DRAWING FOR
BRIDGE APPROACH FILLS
TYPE 2A APPROACH FILL
ALTERNATE FOR INTEGRAL ABUTMENT

SHEET 2 OF 3

423.04

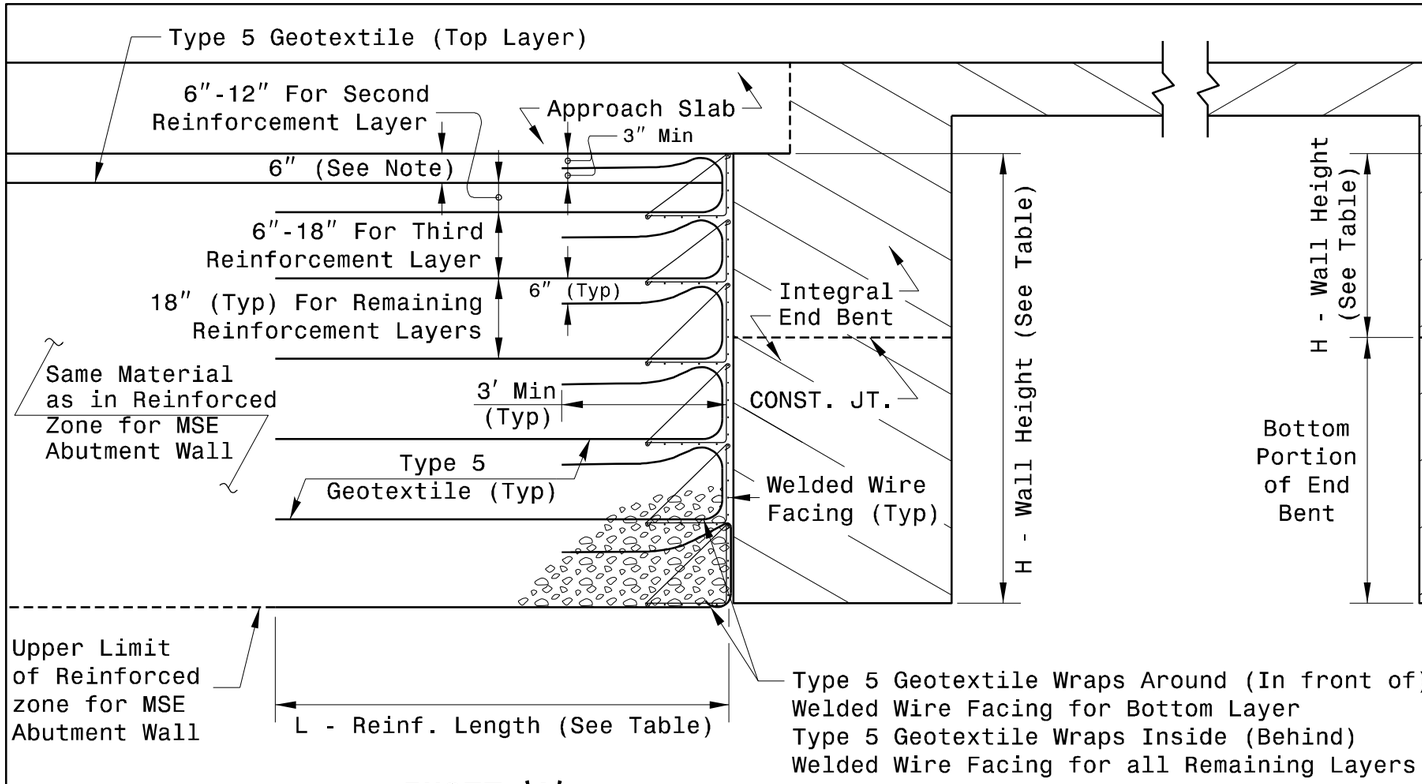

INSET 'A'

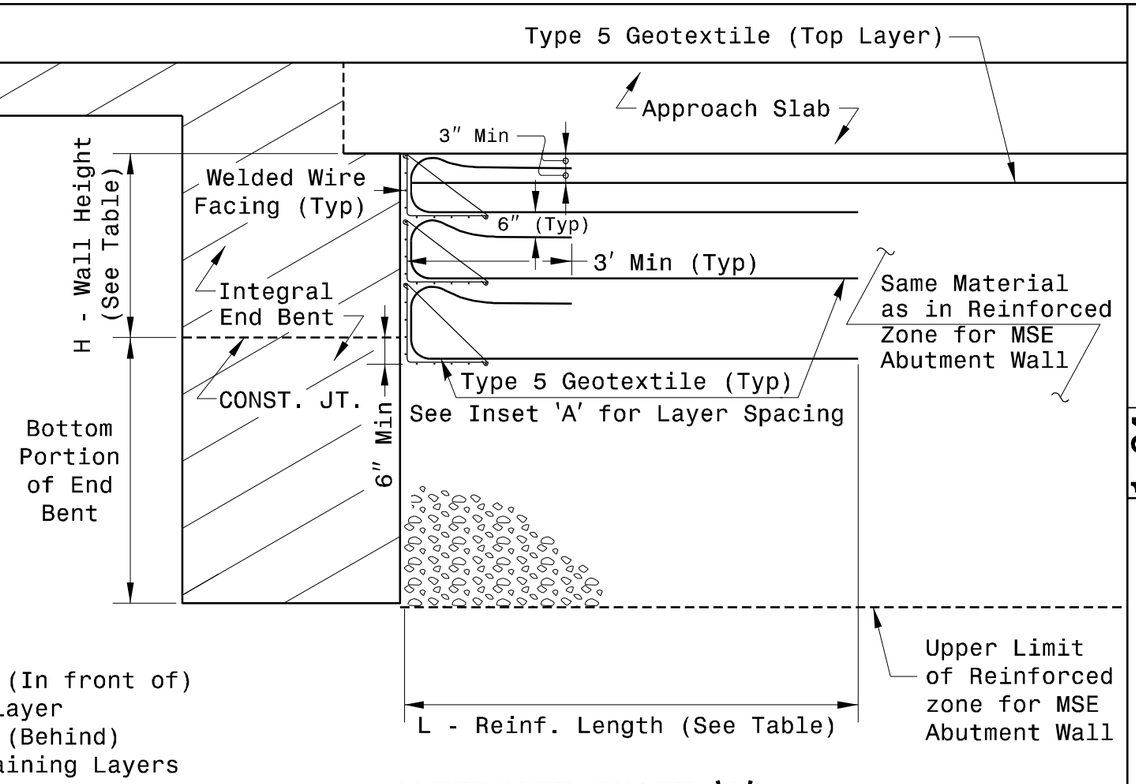

ALTERNATE INSET 'A'

(Allowed When Bottom Portion of Integral End Bent is Constructed Before Temporary Wall and End Bent Piles are at Least 25′ Long or Drilled In)

NOTE: Place top (first) reinforcement layer 6″ below top of wall regardless of vertical spacing for underlying reinforcement layers. As shown in insets above, it is not necessesary to wrap the top layer of geotextile reinforcement at the wall face.

TEMPORARY GEOTEXTILE WALL DETAILS

TYPE 5 GEOTEXTILE REINFORCEMENT LENGTH (except for top layer)	
WALL HEIGHT H (ft)	REINFORCEMENT LENGTH L (ft)
< 8	8
8 TO 12	= H

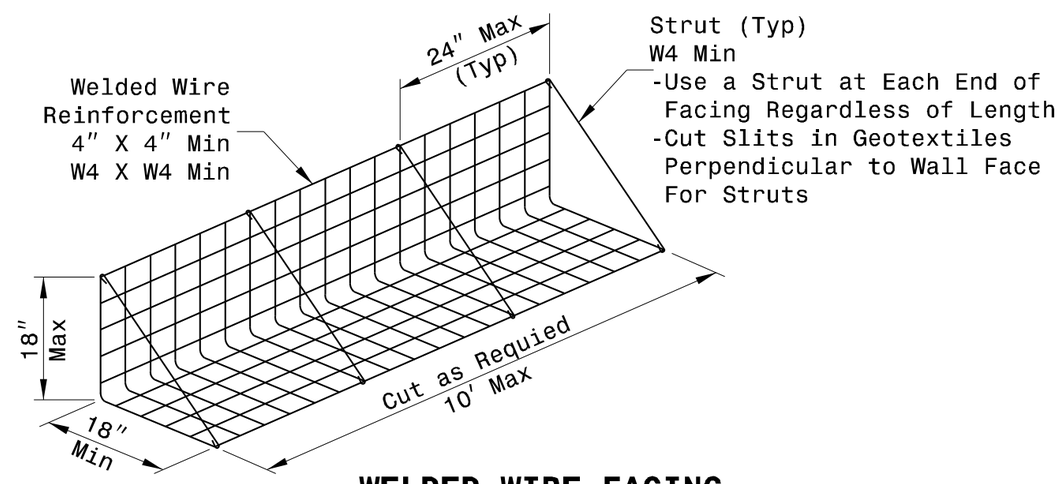

WELDED WIRE FACING

STATE OF NORTH CAROLINA
DEPT. OF TRANSPORTATION
DIVISION OF HIGHWAYS
RALEIGH, N.C.

1-24

ROADWAY DETAIL DRAWING FOR
BRIDGE APPROACH FILLS
TYPE 2A APPROACH FILL
ALTERNATE FOR INTEGRAL ABUTMENT

SHEET 3 OF 3

423.04