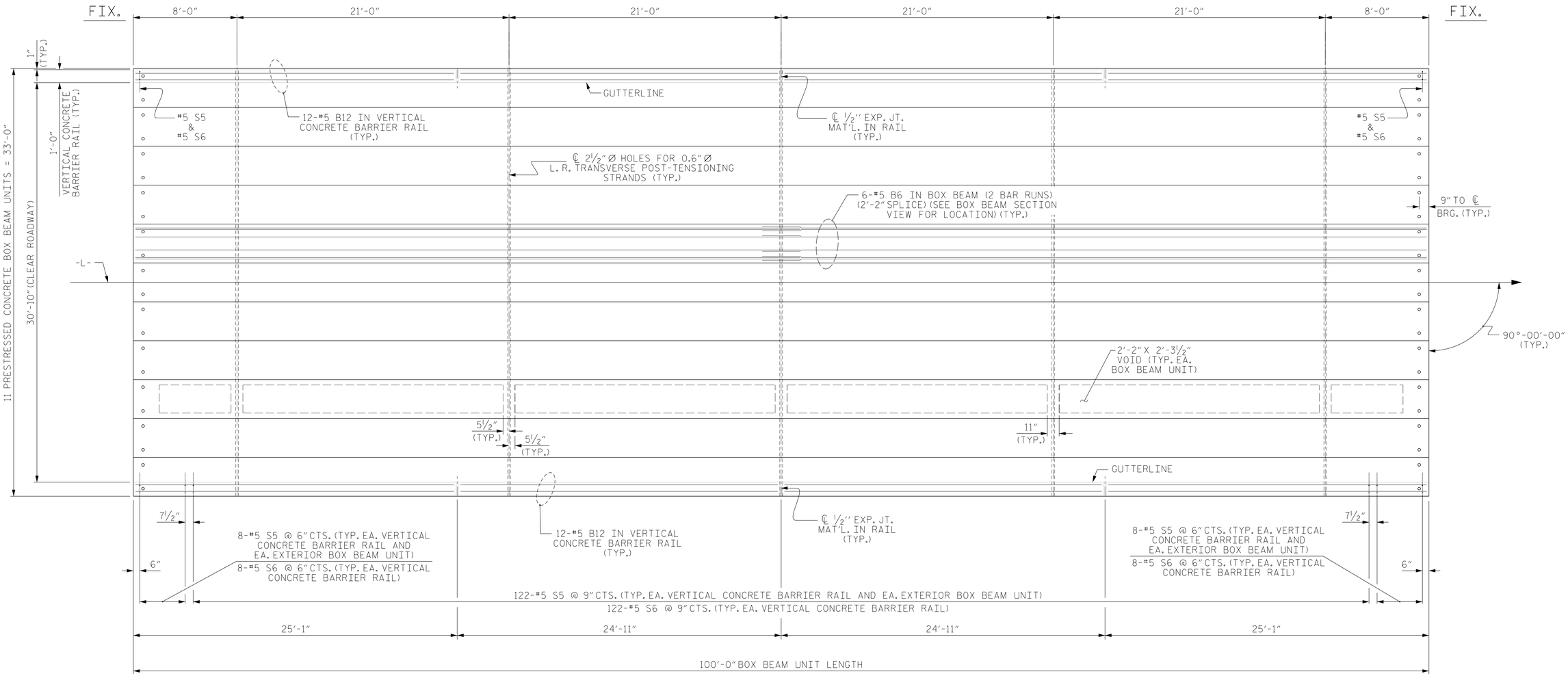


## PLAN OF UNIT

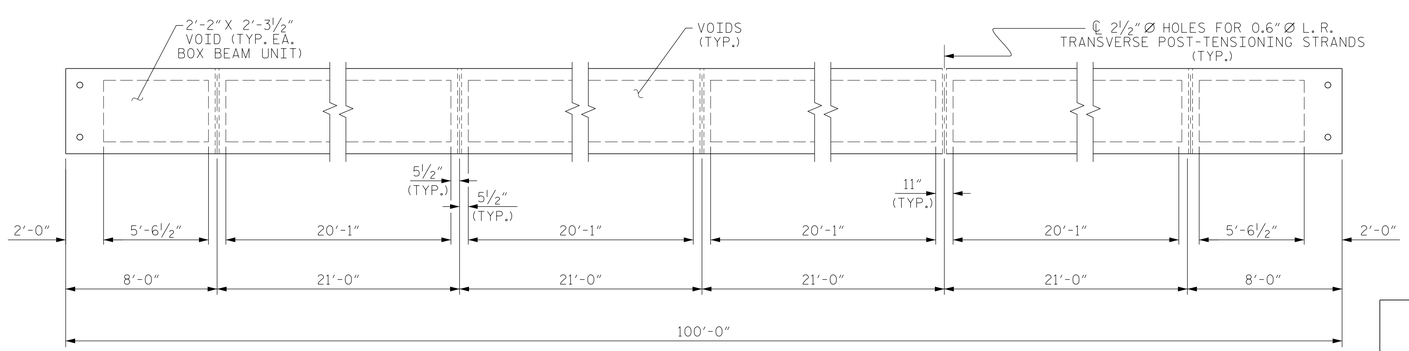


## DIAPHRAGM AND VOID LAYOUT

PROJECT NO. 17BP.5.R.78

WARREN COUNTY

STATION: 14+19.50 -L-

SHEET 2 OF 5

STATE OF NORTH CAROLINA
DEPARTMENT OF TRANSPORTATION
RALEIGH

# PLAN OF 100' UNIT 30'-10" CLEAR ROADWAY 90° SKEW

NORTH CAROLINA PROFESSIONAL SEAL 11725 ENGINEER DAVID R. RUGGLES

DocuSigned by: David R. Ruggles C46278DF412422 10/24/2022

DOCUMENT NOT CONSIDERED FINAL UNLESS ALL SIGNATURES COMPLETED

STEWART

Firm License No. C-1051
421 Fayetteville St,
Suite 400
Raleigh, NC 27601
T 919.380.8750
www.stewartinc.com

| REVISIONS | | | | | | |
|---|---|---|---|---|---|---|
| NO. | BY: | DATE: | NO. | BY: | DATE: | |
| 1 | | | 3 | | | |
| 2 | | | 4 | | | |

SHEET NO. S-5

TOTAL SHEETS 16

| | | | |
|---|---|---|---|
| DRAWN BY: | E. PHELPS | DATE : | 12/17 |
| CHECKED BY: | J. LOFTUS | DATE : | 01/18 |
| DESIGN ENGINEER OF RECORD: | J. LOFTUS | DATE : | 01/18 |

WARREN 140

2/13/2019
...\400_005_920140_SMU_SUP01.dgn
USER:vchung

STD.NO.39PCBB_33_90S_100L